002 - H

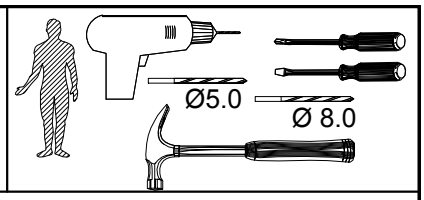

W	F	M4.0X20 G	8.0X30 D	A	B	R	I
2	3	6	16	8	8	1	6
4.0X30 P	6.3x13 H	L	"0" Z	S	6.0x11 D	M4.0X8 E	J
4	4	2	2	4	8	4	4
KR							
2							

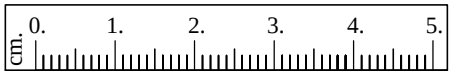

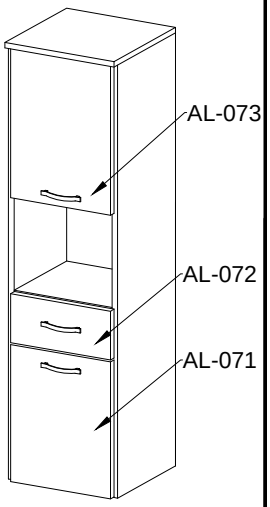

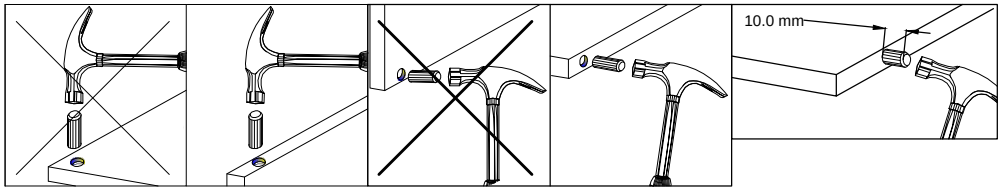

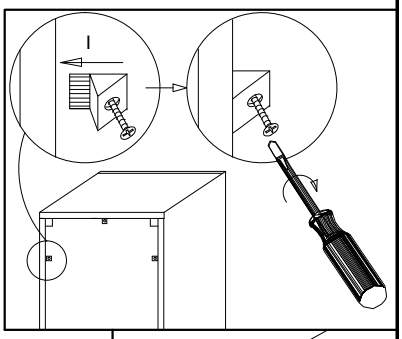

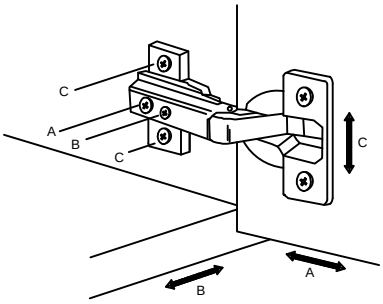

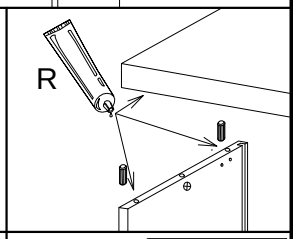

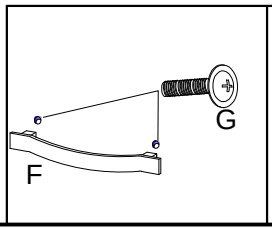

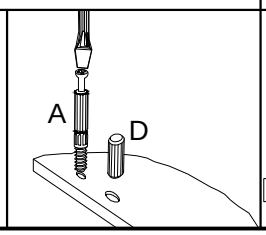

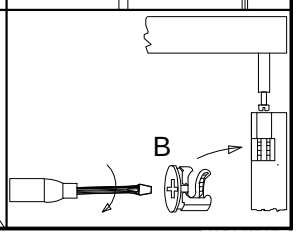

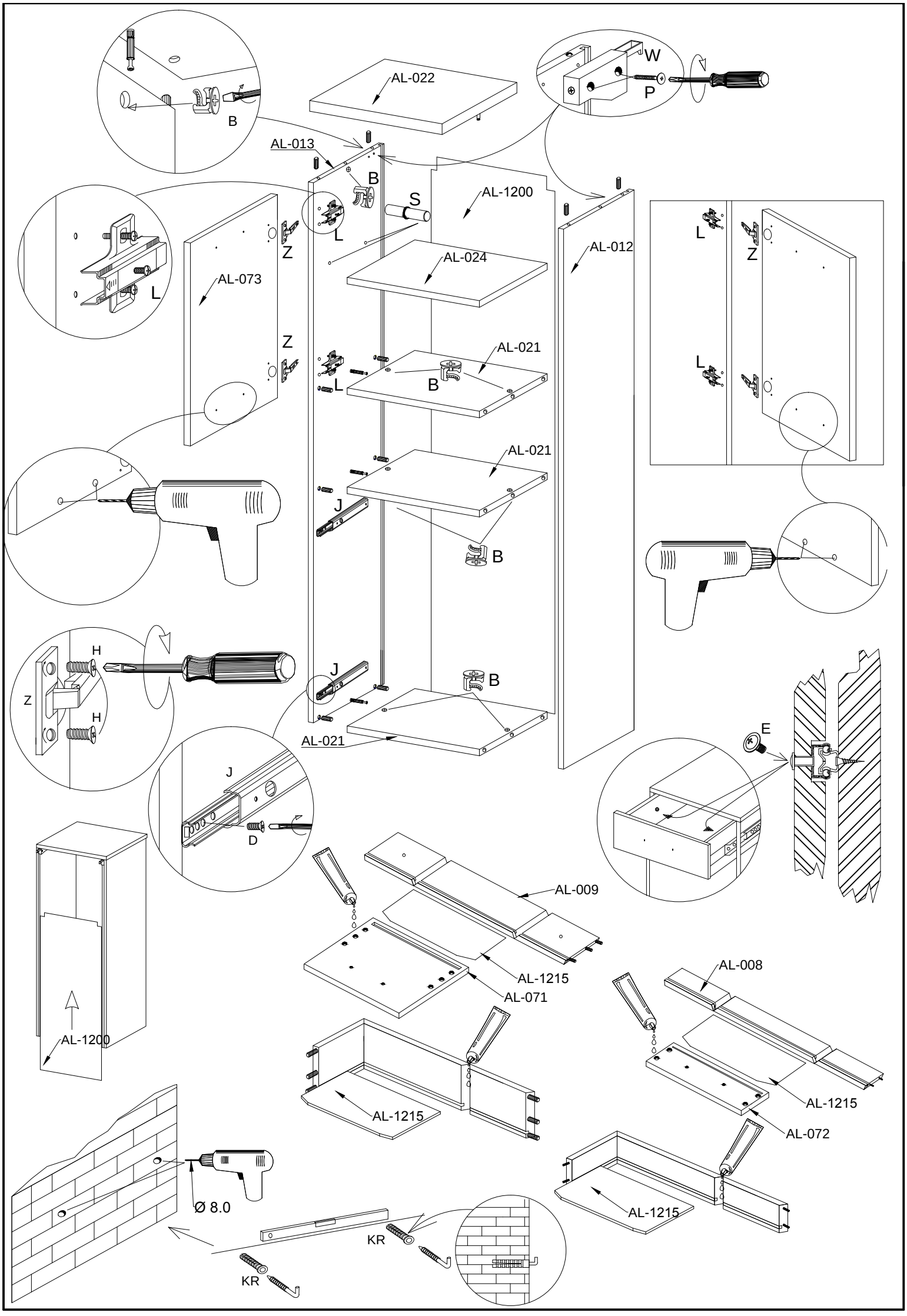
AL-022
W
P
B
AL-013
B
S
AL-1200
L
Z
AL-024
AL-012
L
Z
AL-073
L
Z
AL-021
L
B
L
AL-021
J
B
H
Z
H
J
B
AL-021
E
J
D
AL-009
AL-1215
AL-071
AL-008
AL-1200
AL-1215
AL-1215
AL-072
Ø 8.0
AL-1215
KR
KR